Worldwide Excellence For Over 40 Years

111 Canfield Ave., Suite A-1, Randolph, NJ 07869 • Toll Free (800) LANDICE • Fax (973) 927-0630

Rev. 11/12/10

Parts List for Exploded View 70's series Treadmills

Note: Always get Version number for electronic components to insure compatibility.

NUMBER	MODEL	DESCRIPTION	PART NUMBER
1	L7/L8/L9	DISPLAY BOARD – SPORTS TRAINER	70591
		DISPLAY BOARD – PRO SPORT TRAINER 3	70565
		DISPLAY BOARD – CARDIO TRAINER 2	70586
		DISPLAY BOARD – EXECUTIVE TRAINER 2	70568
		DISPLAY BOARD – RTM/RTM-REV	70424-RTM
2	L7/L8/L9	FACEPLATE –SPORTS TRAINER	70593
		MEMBRANE PANEL – PRO SPORT TRAINER 3	70566
		MEMBRANE PANEL – CARDIO TRAINER 2	70567
		MEMBRANE PANEL – EXECUTIVE TRAINER 2	70569
		FACEPLATE – RTM 2	70594
		FACEPLATE – RTM 2, REVERSING	70595
3	L7/L8/L9	READING RACK, CADDY, ASSEMBLY	70522-SP (-BK, TI)
4	L7/L8/L9	CONTROL PANEL	70555(-BK, -TI)
5	L7/L8/L9	END CAP, UPRIGHT, RIGHT	70572
		END CAP, UPRIGHT, LEFT	70573
6	L7/L8/L9	ENDCAP SCREW, BLACK (1/2")	6-32_1/2_PFHMSB
		ENDCAP SCREW, TITANIUM	6-32X1/2_PMSZN
7	L7/L8/L9	WIRE RETAINER, UPRIGHT	70349
8	L7/L8/L9	UPRIGHT LEG, RIGHT	70556 (-BK, -T1)
		UPRIGHT LEG, LEFT	70557(-BK, -T1)
9	L7/L8/L9	UPRIGHT COVER – LEFT (BLACK)	70559-BK
		UPRIGHT COVER – RIGHT (BLACK)	70558-BK
		UPRIGHT COVER – LEFT (TITANIUM)	70559-TI
		UPRIGHT COVER – RIGHT (TITANIUM)	70558-TI
10	L7/L8/L9	UPRIGHT MOUNTING BOLTS	¼-20x3/4_TT
11	L7/L8/L9	MAGNETIC SAFETY LANYARD	71011-NEW
12	L7/L8/L9	MAGNETIC STUD	70492
13	L7/L8/L9	FLUX GUIDE	70340
14	L7/L8/L9	END CAP, HANDRAIL & UPRIGHT, LEFT*	70582
15	L7/L8/L9	END CAP, HANDRAIL & UPRIGHT, RIGHT*	70581
16	L7/L8/L9	HANDRAIL MOUNTING SCREWS	¼-20_X3/4_HWFL
17	L7/L8/L9	DOME PLUG, HANDRAILS	3149
18	L7/L8/L9	ACCUTRACK MOUNTING BOLT	5/16-18x2_HHMS
19	L7/L8/L9	HANDRAIL, RIGHT ASSEMBLY	70562-SP
		HANDRAIL, LEFT ASSEMBLY	70563-SP
20	L7/L8/L9	END CAP SCREWS TO UPRIGHT LEG	8-32_3/4_TTB
21	L7/L8/L9	END CAP SCREWS TO HANDRAIL	8x1_A_PPSTSZN
22	L7/L8/L9	RAM CONNECTOR, 1/12"	71039
23	L7/L8/L9	ACCUTRACK 4 ASSEMBLY	CONTACT-DCP
		CROSSBAR, ERGO	70564
24	L7/L8/L9	NAMEPLATE, READING RACK	70454
25	L7/L8/L9	BOTTOM, READING RACK	70522-BOTTOM
26	L7/L8/L9	LEFT BUCKET, READING RACK	70522-BUCKETL
27	L7/L8/L9	RIGHT BUCKET, READING RACK	70522-BUCKETR
28	L7/L8/L9	TOP, READING RACK	70522-TOP
29	L7/L8/L9	KEY HOLE PLATE, READING RACK	70522-KEYHOLE

30	L7/L8/L9	READING RACK COVER SCREW	8x1/2_A_PPSTSZN
31	L7/L8/L9	READING RACK CONSOLE SCREW	1/4-20X3/4_HHMS
32	L7/L8/L9	LOCK WASHER	5/16_LW
33	L7/L8/L9	----------	---------
34	L7	TRACTION TAPE, 770 (INDICATE LEFT OR RIGHT)	70585
35	L7	SIDE FRAME COVER, RIGHT	70576 (-BK, -TI)
		SIDE FRAME COVER, LEFT	70557 (-BK, -TI)
36	L7	SIDE FRAME, RIGHT	70560 (-BK, -TI)
		SIDE FRAME, LEFT	70561 (-BK, -TI)
37	L7	TREADBELT, L760/L770	70468
38	L7	DECK, L760/L770	70466
39	L7	TAKE UP ROLLER	70237
40	L7	DRIVE ROLLER	70236
41	L7	DRIVE ROLLER SHEAVE	CV-18-2
42	L7	FELT WASHER, 70	70220
43	L7/L8/L9	VFX DECK LOAD WASHER - 70 SERIES	70216
44	L7/L8/L9	IMPACT ABSORBERS – BLACK	70221
		IMPACT ABSORBERS – RED	70221-R
45	L7	POST, VFX DECK	70580
46	L7/L8/L9	DRIVE ROLLER SCREW	¼-20x3/4_HWFL
47	L7/L8/L9	SIDE FRAME COVER & DECK SLAT SCREWS	¼-20_3/4_TTZ
48	L7/L8/L9	UPRIGHT HEX HEAD BOLT	¼-20X3/4-TT`
49	L7/L8/L9	STAR WASHER	¼_LW_EXT
50	L7/L8/L9	MOTOR COVER SCREW	8-32_3/4_TTB
51	L7/L8/L9	MOTOR COVER FINISHING WASHER	10_FINISHING_W
52	L7/L8/L9	RUBBER MOTOR GROMENT	1259
53	L7/L8/L9	TAKE UP BOLT WASHER	3/8_FW_BL_OX
54	L7/L8/L9	BED END CAP SCREWS	8-32_3/4_TTB
55	L7/L8/L9	ZINC LOCK WASHER	8_LW
56	L7	END CAP, BED 70, RIGHT	70578
		END CAP, BED 70, LEFT	70579
57	L7/L8/L9	TAKE UP BOLT	3023
58	L7	BELT GUIDE	70208
59	L7	BELT GUIDE SCREW	8x1_A_PPSTS_ZN
60	L7/L8	FOOTBOLT	¼-20_3/4_TTZ
61	L7/L8	FOOT, SOLID FOOT	70008
	L9	FOOT, SOLID FOOT , L9	70421
62	L7/L8/L9	DECK SLAT, VFX	70240
63	L8/L9	BED ENDCAP, RIGHT, L8622	70508-BK
		BED ENDCAP, LEFT, L8622	70509-BK
64	L8/L9	TREADSTRIP (GRIP TAPE) Indicate left or right	70293
65	L8/L9	SIDE FRAME COVER, RIGHT, L8622	70286 (-BK, -TI)
		SIDE FRAME COVER, LEFT, L8622	70287 (-BK, -TI)
66	L8/L9	TREADBELT, L8622	70513
		TREADBELT, ORTHO, L8622	70535
67	L8/L9	FELT WASHER, L8622	70516
68	L8/L9	SHEAVE, DRIVE ROLLER, L8	70290
69	L8/L9	DRIVE ROLLER, L8622/70	70504
70	L8/L9	TAKE UP ROLLER, L8622/70	70505
71	L8/L9	DECK, L8622/70	70296
72	L8/L9	SIDE FRAME, RIGHT, L8622	70510 (-BK, -TI)
		SIDE FRAME, LEFT, L8622	70511 (-BK, -TI)
73	L8/L9	SPACER, L8622	70506
74	L8/L9	SLEEVE, SPACER, L8622	70515
75	L8/L9	VFX POST, L8/L9	70297
76	L7/L8/L9	HITCH PIN FOR AXEL, WIDE	213
77	L7/L8/L9	WHEEL AXEL, WIDE	70359

78	L7/L8/L9	WHEEL, WIDE	70358
79	L7/L8/L9	BEARING BLOCK BOLTS	¼-20_2_MSZ
80	L7/L8/L9	BEARING BLOCK SPACER, WIDE	70403
81	L7/L8/L9	ELEVATION PIN	70032
82	L7/L8/L9	ELEVATION PIN SCREWS	¼-20_9/16
83	L7/L8/L9	CLEVIS BOLT HARDWARE	70345
84	L7/L8/L9	HITCH PIN(MOTOR BRACKET AND CLEVIS)	233
85	L7/L8/L9	ELEVATION LEG RUBBER BUMPER	2215
86	L7/L8/L9	MOUTOR MOUNT SPACER, RUBBER	70090
87	L7/L8/L9	MOUTOR MOUNT SPACER, METAL	70089
88	L7/L8/L9	TENSION SCREW NUT	¼-20_NUT
89	L7/L8/L9	TENSION SCREW FLAT WASHER	1/4_SHOULDER_W
90	L7/L8/L9	FOAM BLOCK	70103
91	L7/L8/L9	CLEVIS PIN	70063
92	L7/L8/L9	ELEVATION POTENTIOMETER	71013
93	L7/L8/L9	ELEVATION NUT	MISC
94	L7/L8/L9	MOTOR BRUSH CAP	MISC
95	L7/L8/L9	MOTOR BRUSH, 110V	70222
		MOTOR BRUSH, 220V	70223
96	L7/L8/L9	MOTOR BRUSH HOLDER	MISC
97	L7/L8/L9	SPEED SENSOR BRACKET	70067
98	L7/L8/L9	SPEED SENSOR	71007
99	L7/L8/L9	FLYWHEEL FLAT WASHER	¼_FENDER_W
100	L7/L8/L9	ELEVATION CLEVIS	70049
101	L7/L8/L9	BEARING BLOCK WASHER, WIDE	70402
102	L7/L8/L9	BEARING BLOCK, WIDE (SINGLE PIECE)	70373
103	L7/L8/L9	TENSION SCREW	70071
104	L7/L8/L9	ELEVATION LEG ASSEMBLY, WIDE	70367
	L7/L8/L9	ELEVATION LEG ASSEMBLY, WIDE	70374
105	L7/L8/L9	DRIVE BELT, L760	220J10
	L7/L8/L9	DRIVE BELT, L860	70291
106	L7	MOTOR COVER AERO, 70	70574-SP
	L8/L9	MOTOR COVER, L870/L970	70575-SP
107	L7/L8/L9	MOTOR PAN	70242-BK
108	L7/L8/L9	ELEVATION MOTOR W/ POTENTIOMETER, 110V	70088-C-SP
		ELEVATION MOTOR W/ POTENTIOMETER, 220V	70126-SP
109	L7/L8/L9	DRIVE MOTOR, 110V	70014
		DRIVE MOTOR, 220V	70125
110	L7/L8/L9	FLYWHEEL	70010
111	L7/L8/L9	MOTOR BRACKET	70071
		MOTOR BRACKET, L8622	70507
112	L7/L8/L9	MOTOR BRACKET SCREWS	1/4-20_9/16_MSZ
113	L7/L8/L9	END CAP, MEDICAL RAIL 70 (Left and Right)	70602
114	L7/L8/L9	CLAMP, MEDICAL RAIL 70, RIGHT	70589
		CLAMP, MEDICAL RAIL 70, LEFT	70590
115	L7/L8/L9	MEDICAL RAIL, 70 RIGHT	70597
		MEDICAL RAIL, 70 LEFT	70598
116	L7/L8/L9	RAIL CLAMP, 70	70435
117	L7/L8/L9	ALLEN BOLT	1/4-20_3/4_SHCS
118	L7/L8/L9	RAIL CLAMP BOLT	¼-20_2_PPHTTB
119	L7/L8/L9	STAR WASHER	¼-WASH_EXT_B

UPRIGHT, 70 SERIES

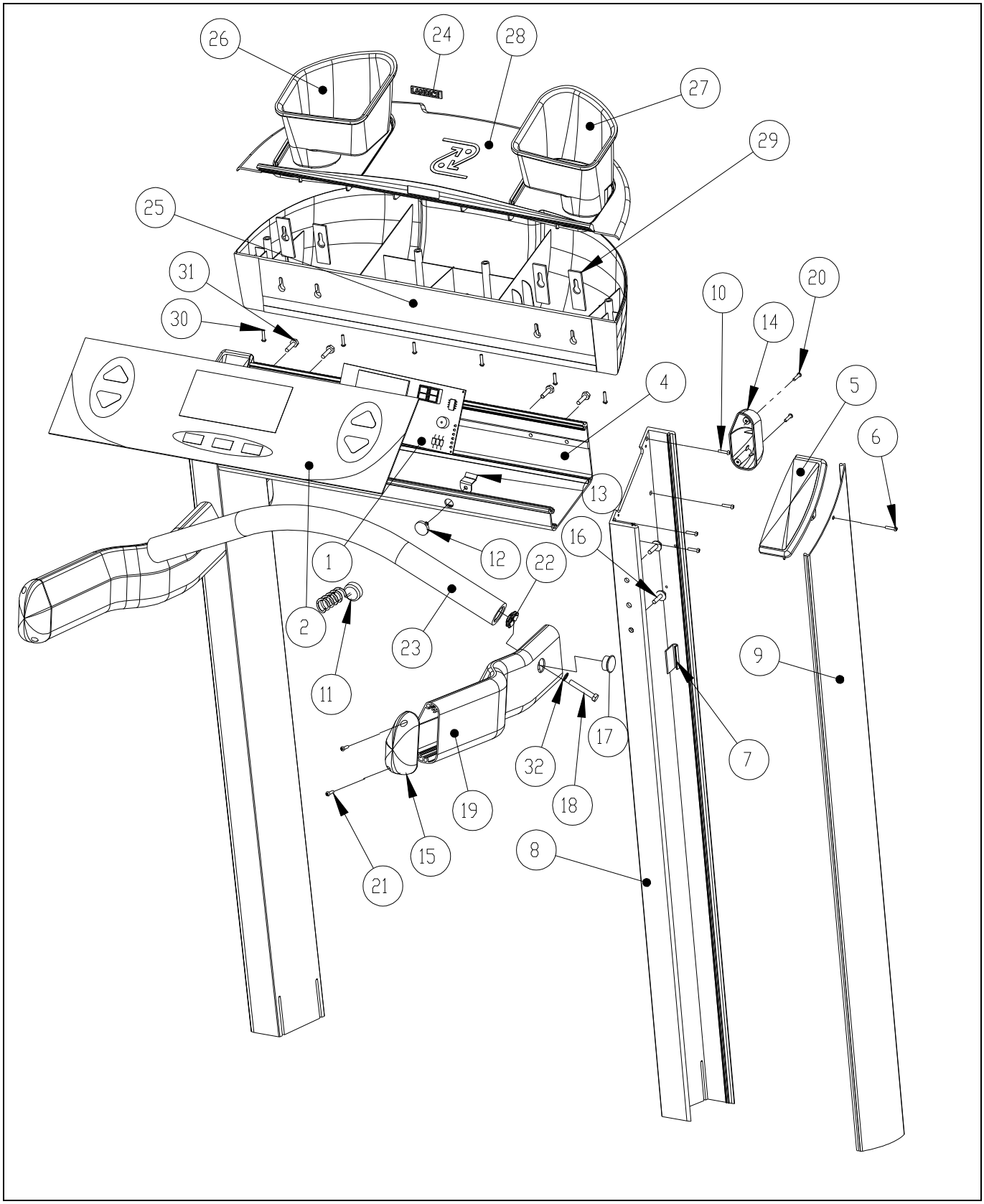

BED, L770 SERIES

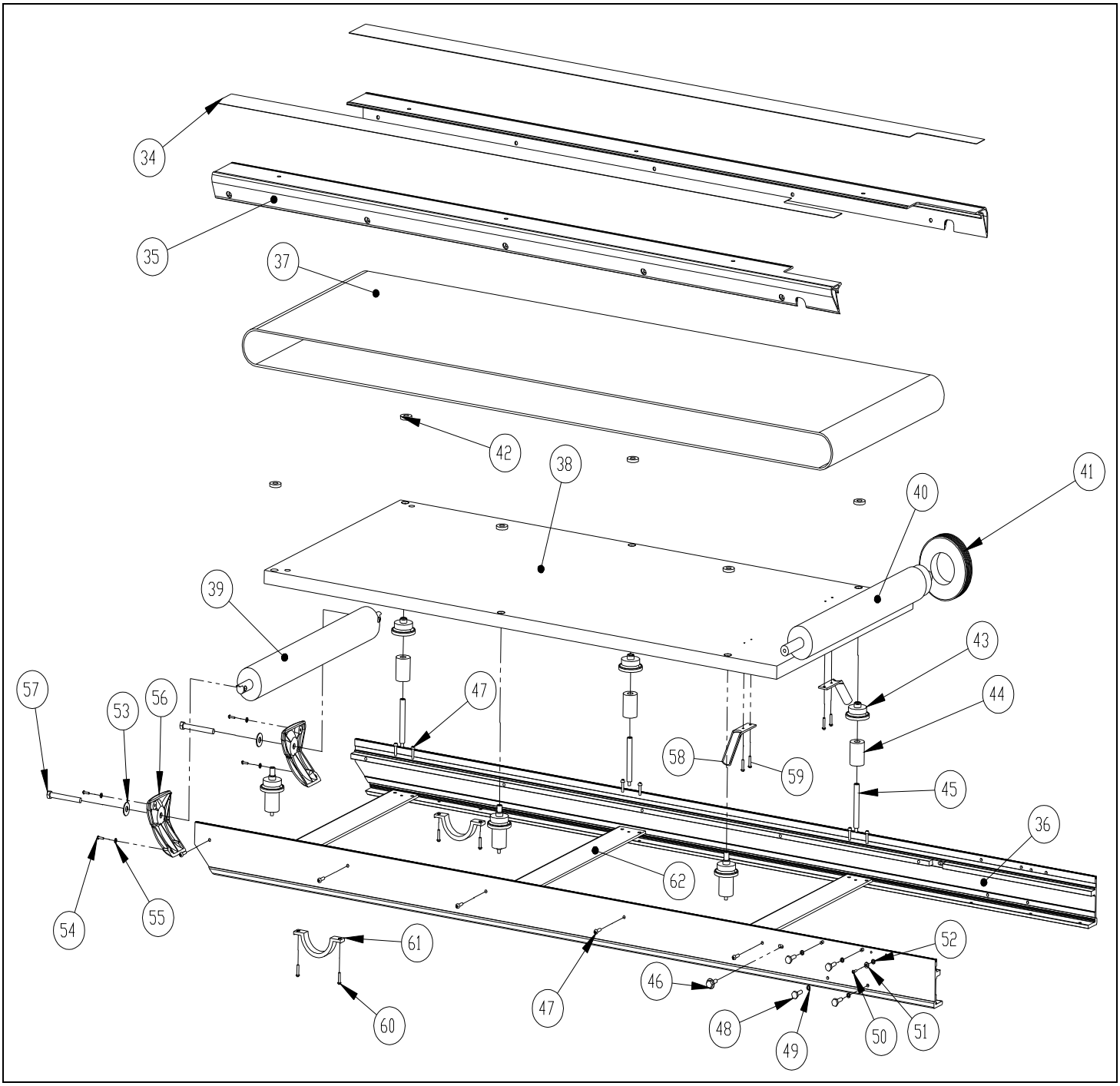

BED, L870 SERIES

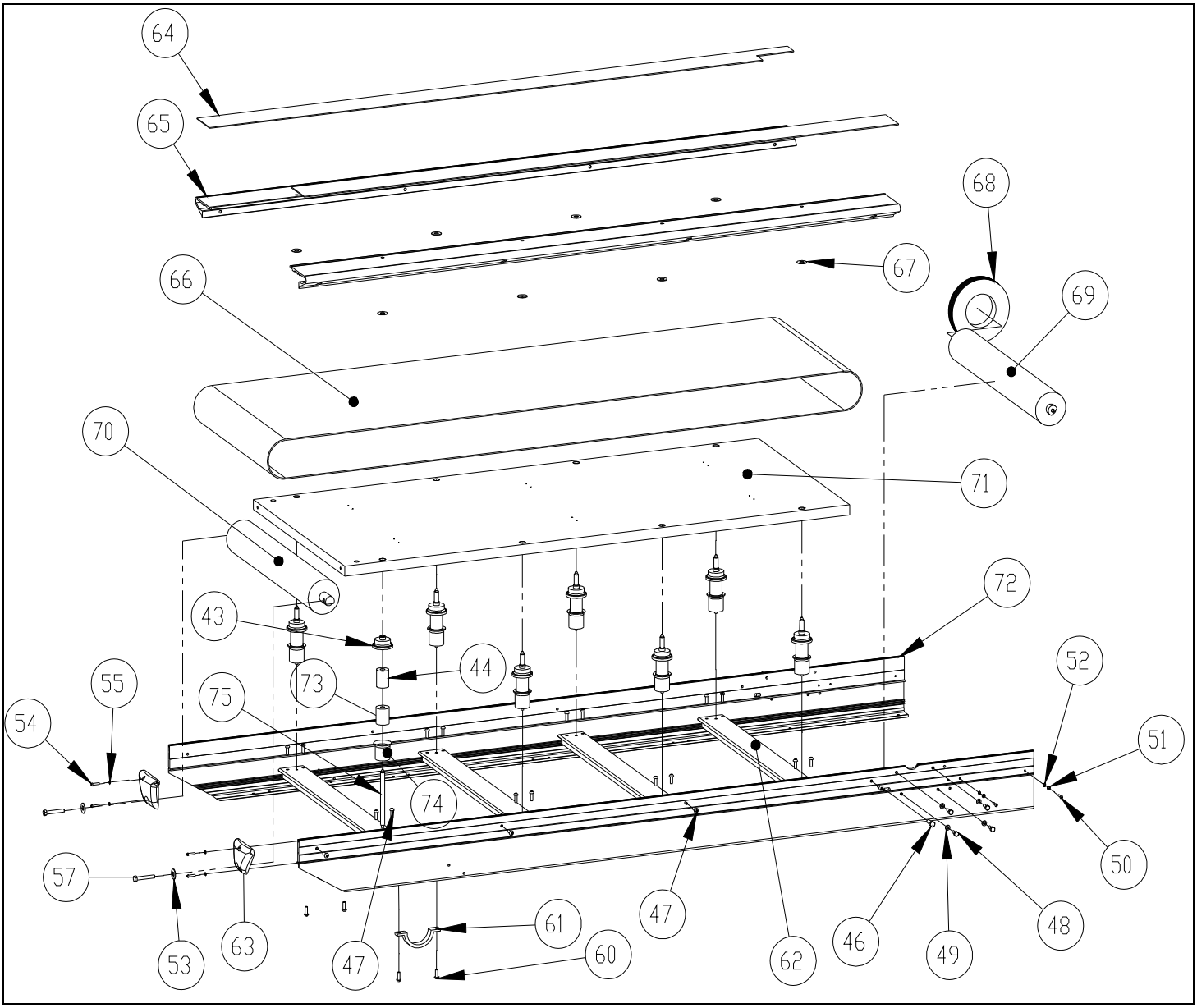

70 SERIES, MOTOR PAN

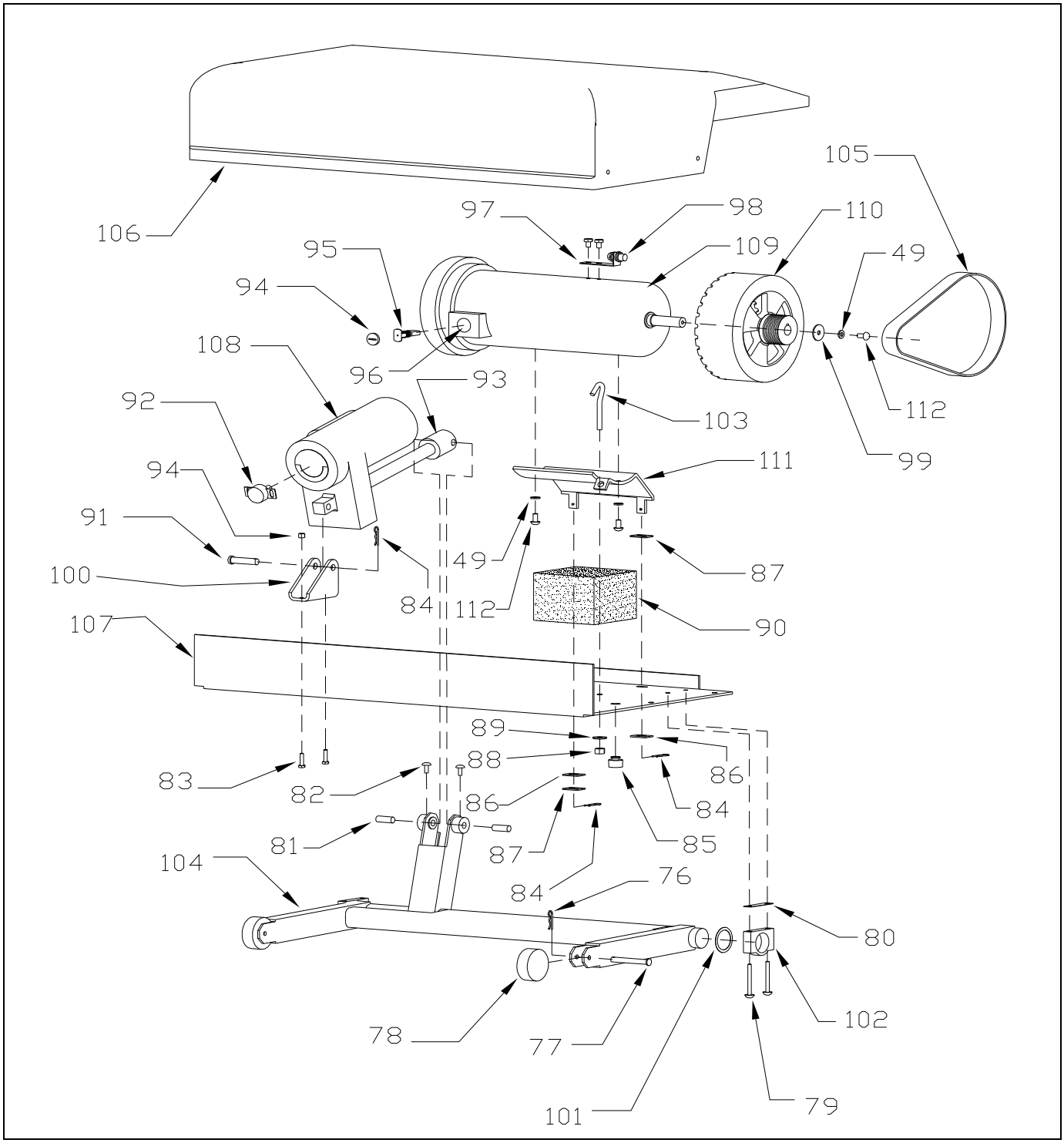

MEDRAIL CLOSE UP, 70 SERIES

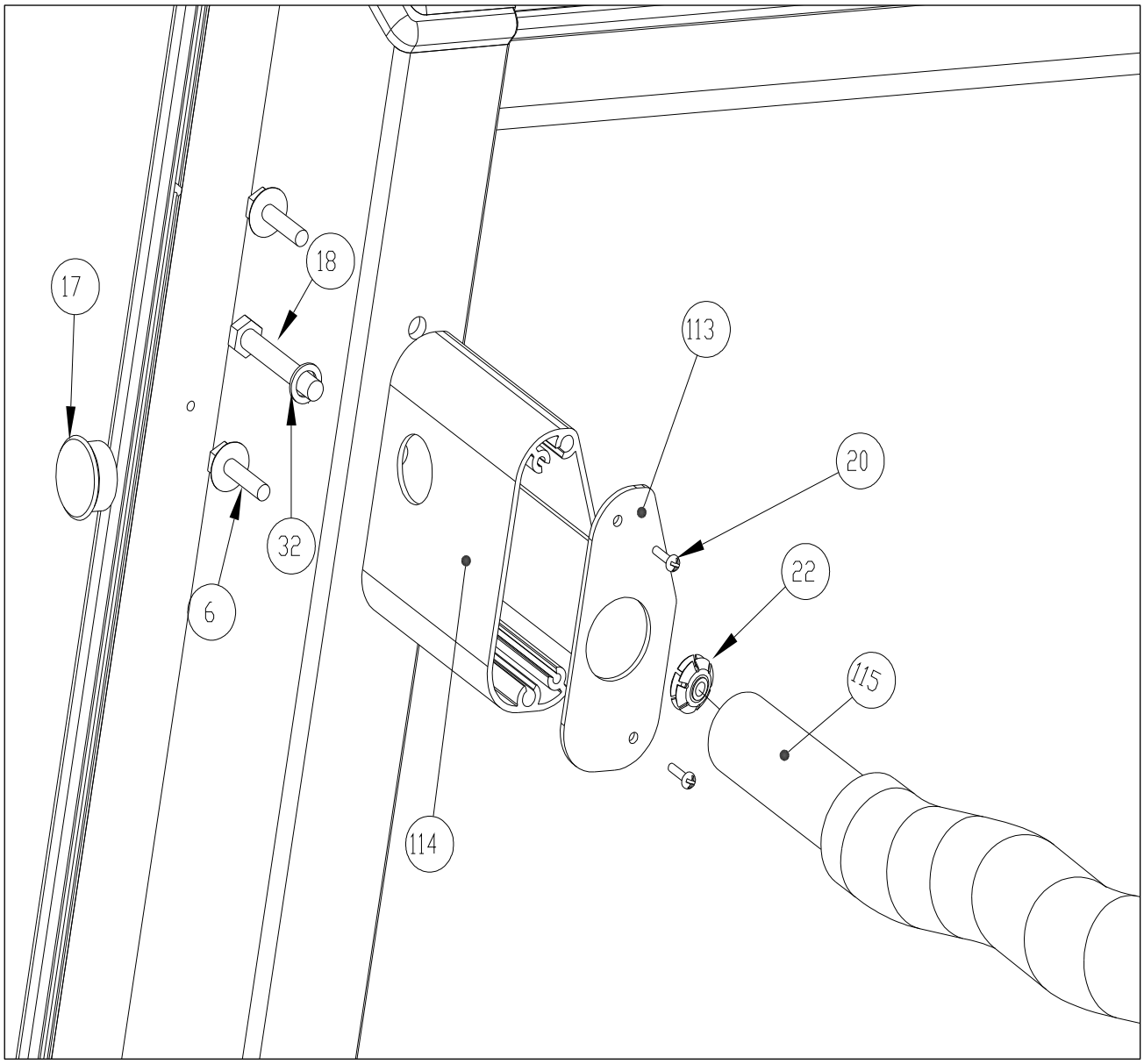
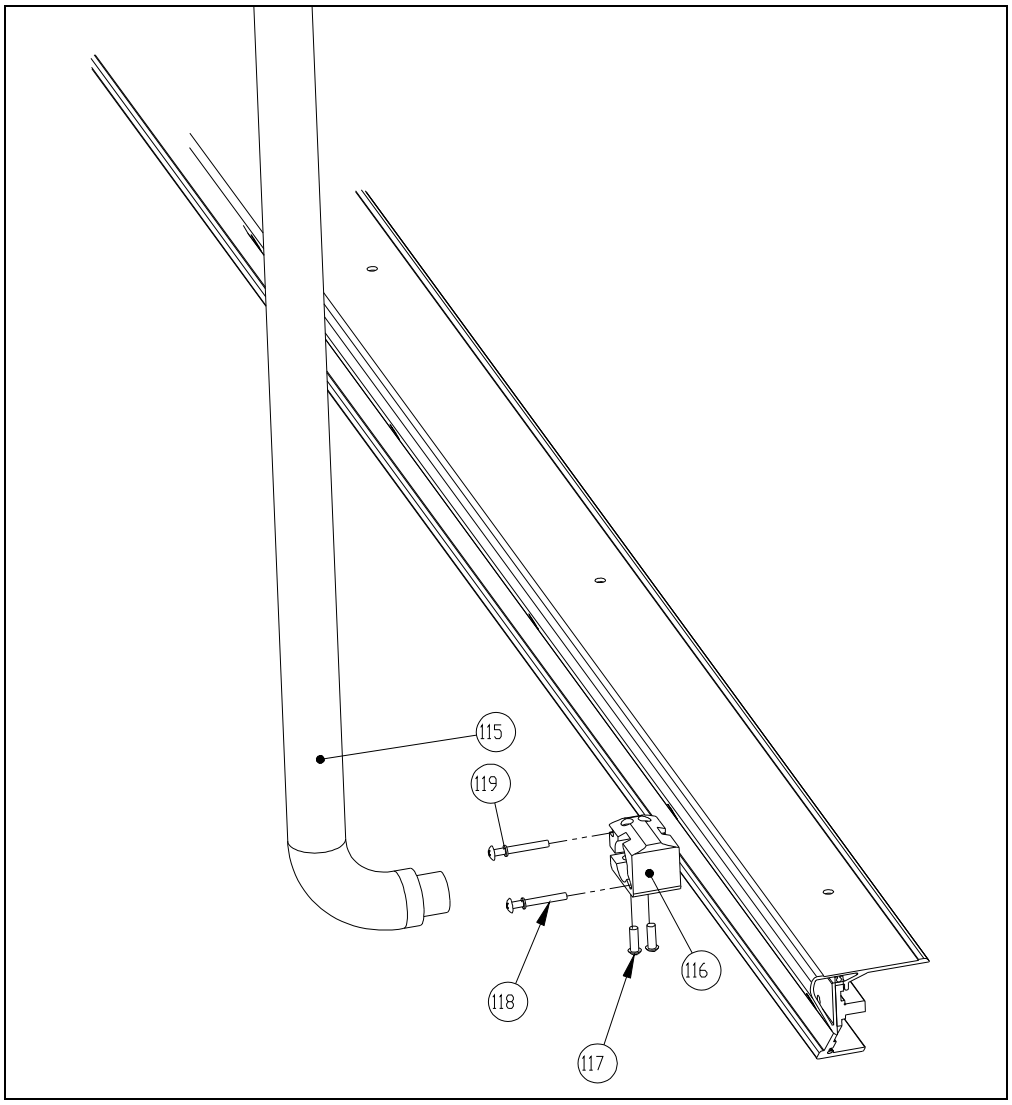
MEDRAIL LOWER CLAMP, 70 SERIES